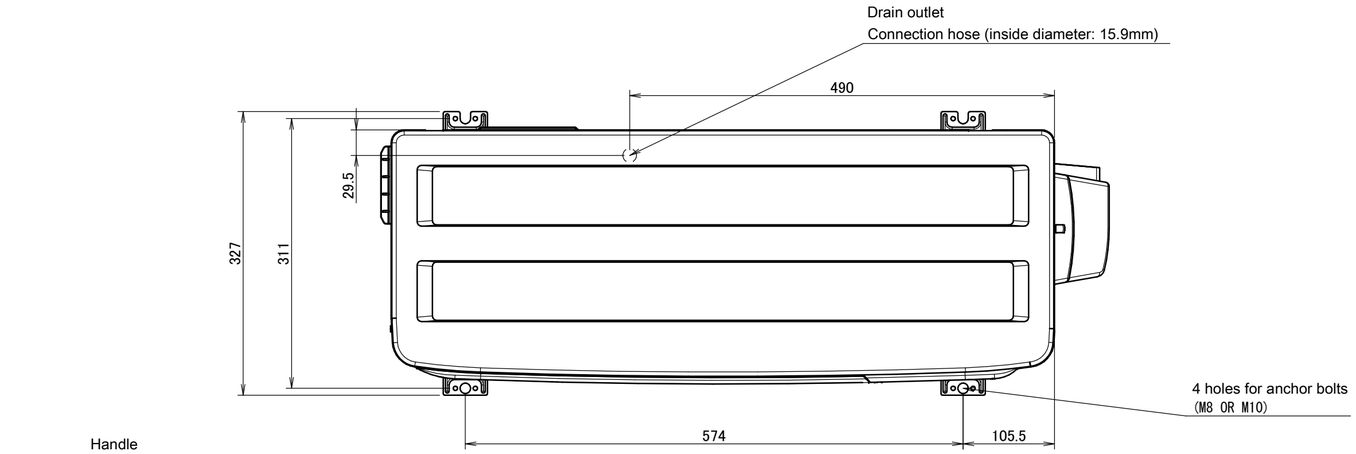

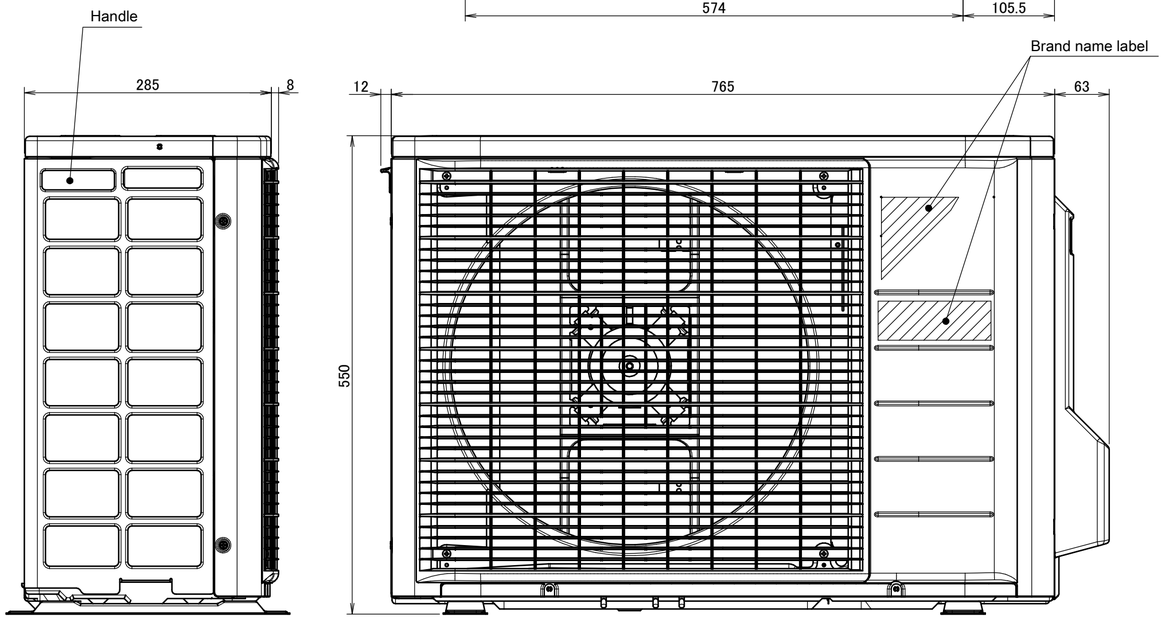

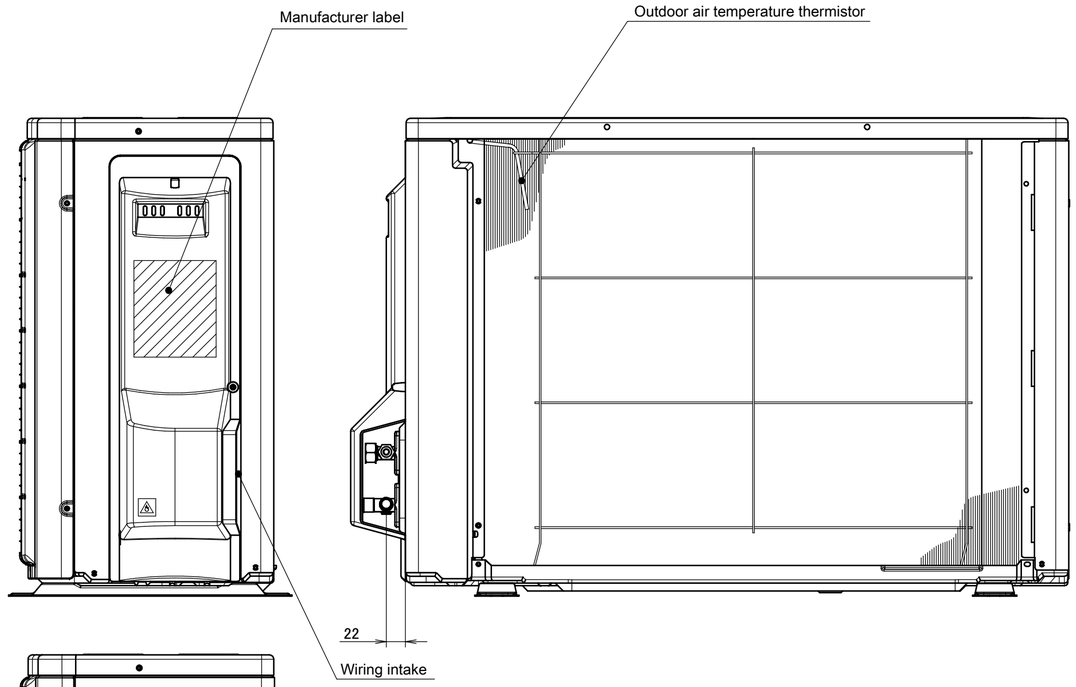

Minimum space for air passage

Wall height on air outlet side < 1200 mm

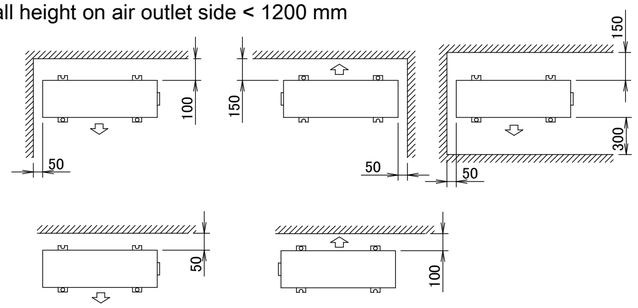

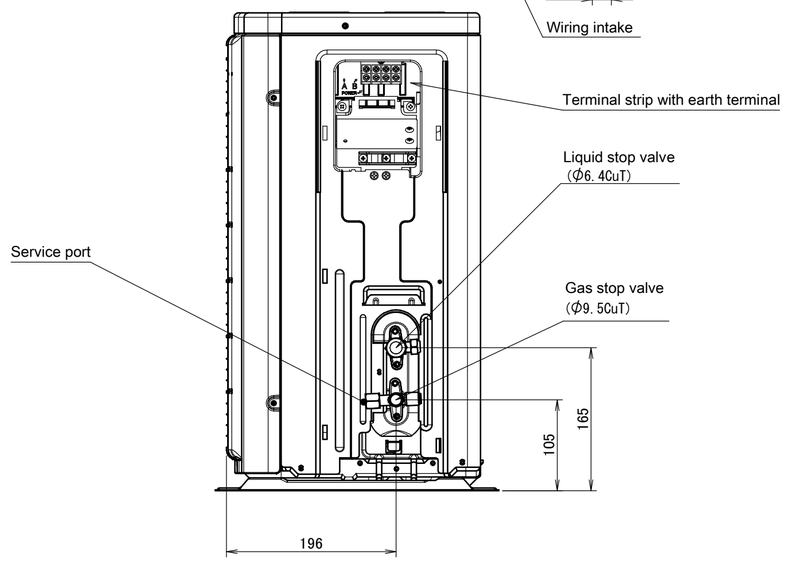

In case of removing the stop valve cover.